Nr.	Description
6	**NEXT LA212x** 3-Way Fully Horn Loaded Line Array Element
6	**NEXT LAs418_2x4Ω** Double Bass Reflex Subwoofer (2x18”)
1	**NEXT LA Rack** 1 x Powersoft X4 1 x Powersoft X8
1	**NEXT Flying Frame** for LA212x
1	**NEXT Complete Cable & Lockpin Set** for LA212x

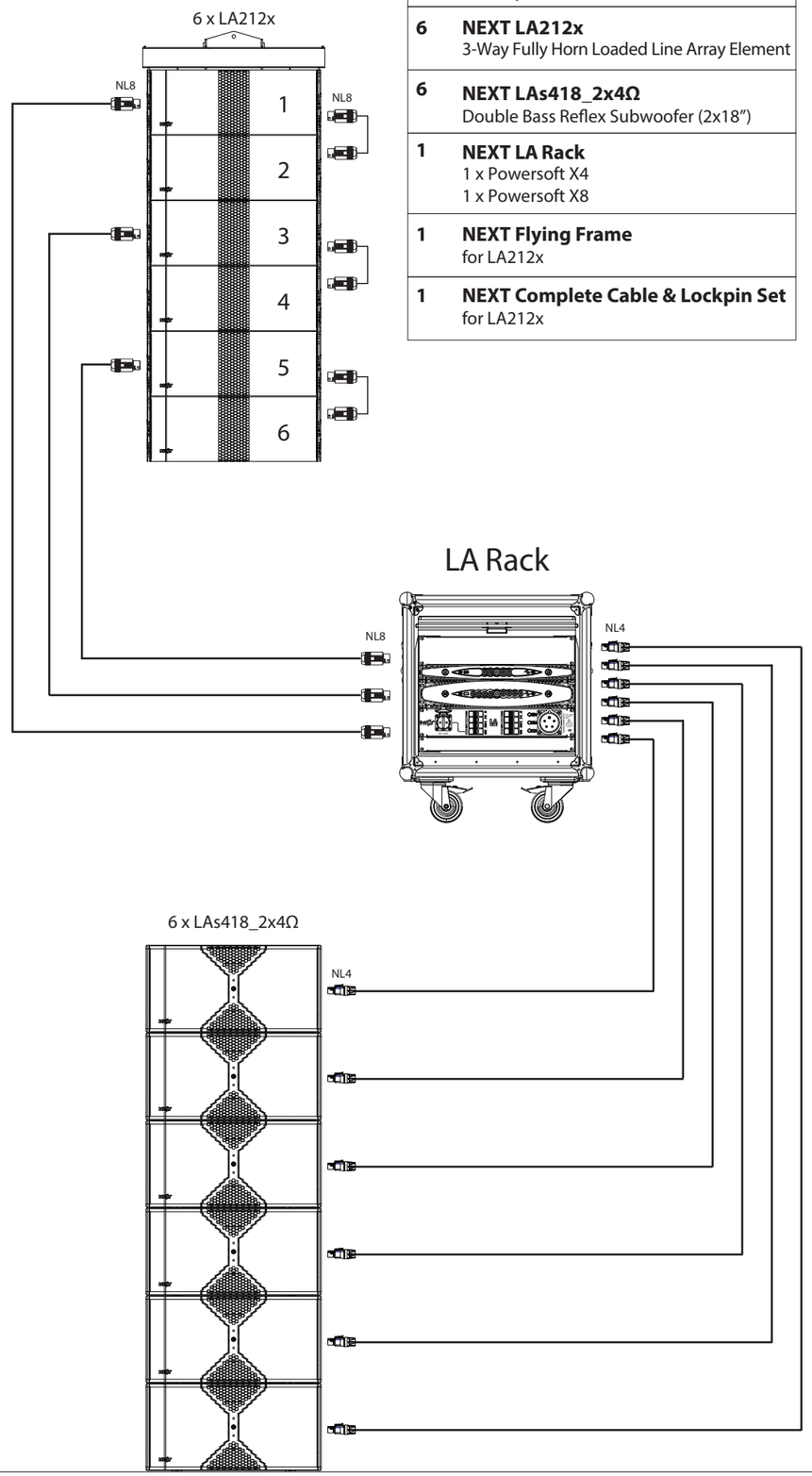
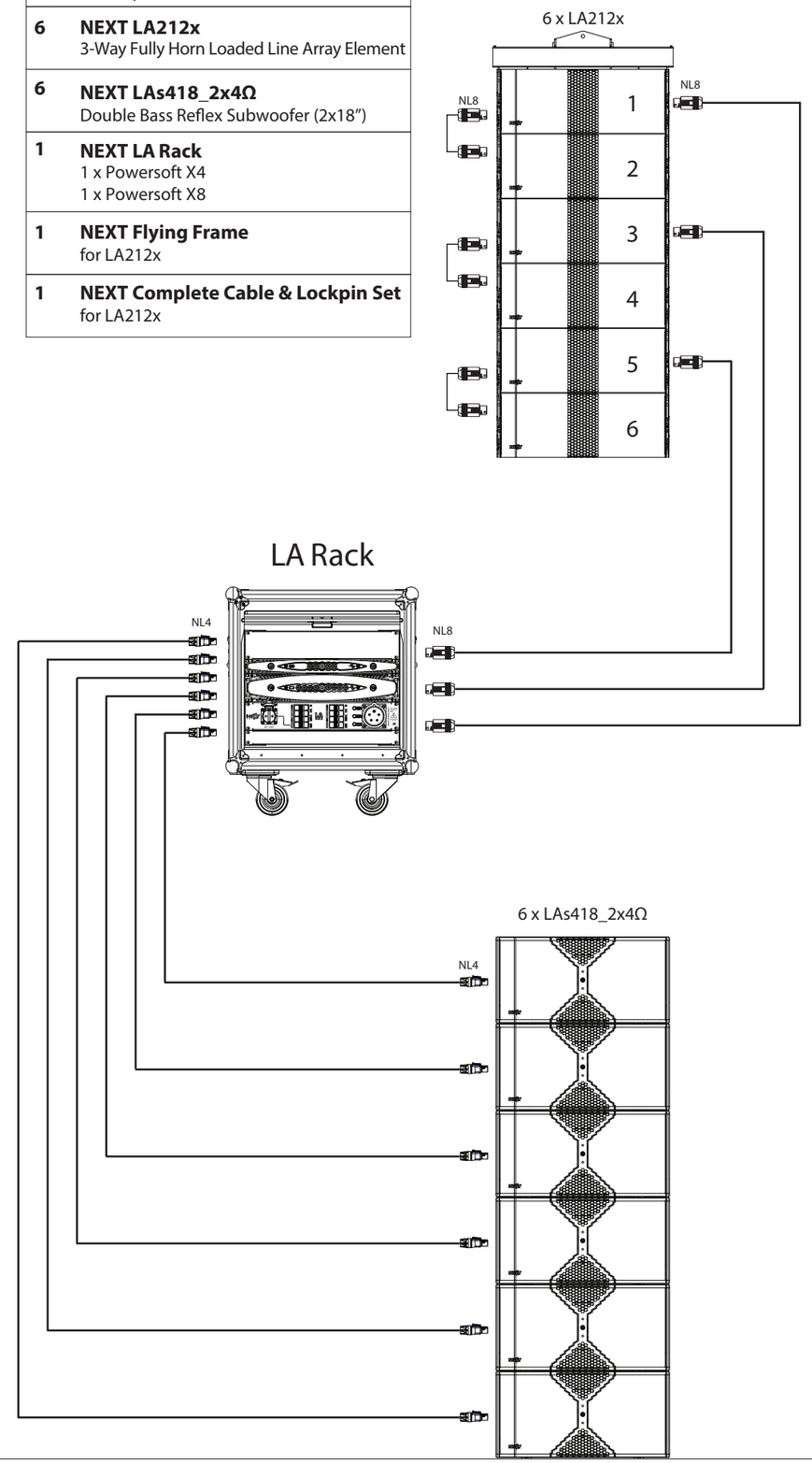
Nr.	Description
6	**NEXT LA212x** 3-Way Fully Horn Loaded Line Array Element
6	**NEXT LAs418_2x4Ω** Double Bass Reflex Subwoofer (2x18”)
1	**NEXT LA Rack** 1 x Powersoft X4 1 x Powersoft X8
1	**NEXT Flying Frame** for LA212x
1	**NEXT Complete Cable & Lockpin Set** for LA212x